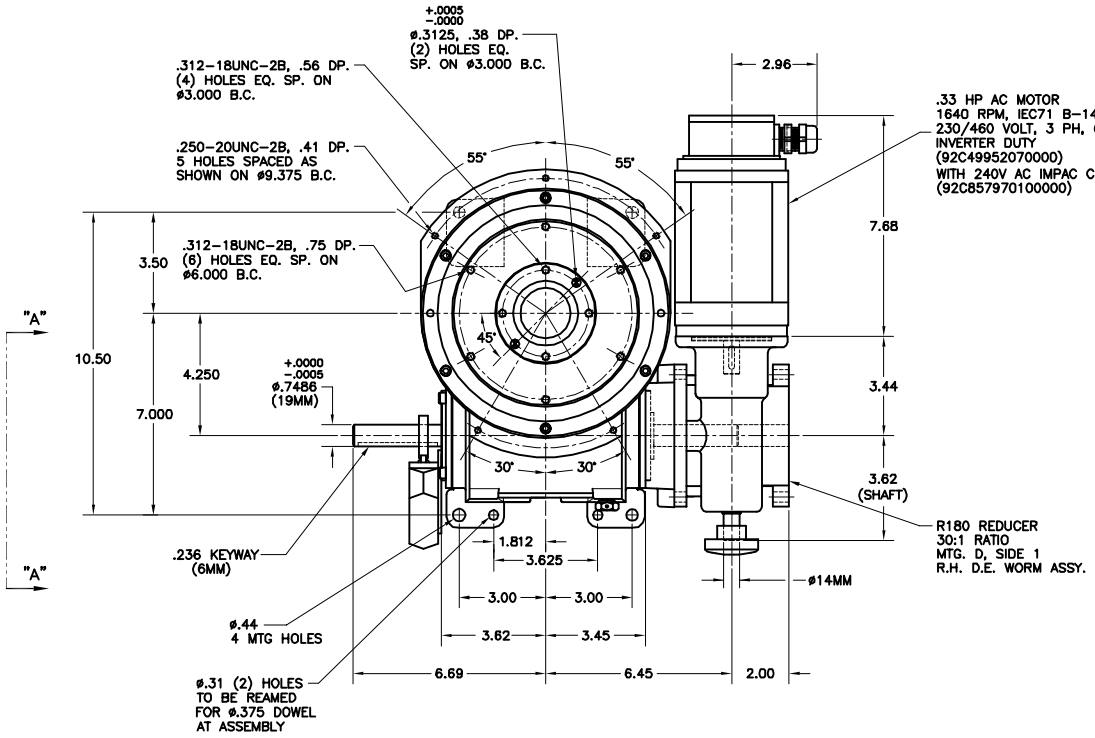

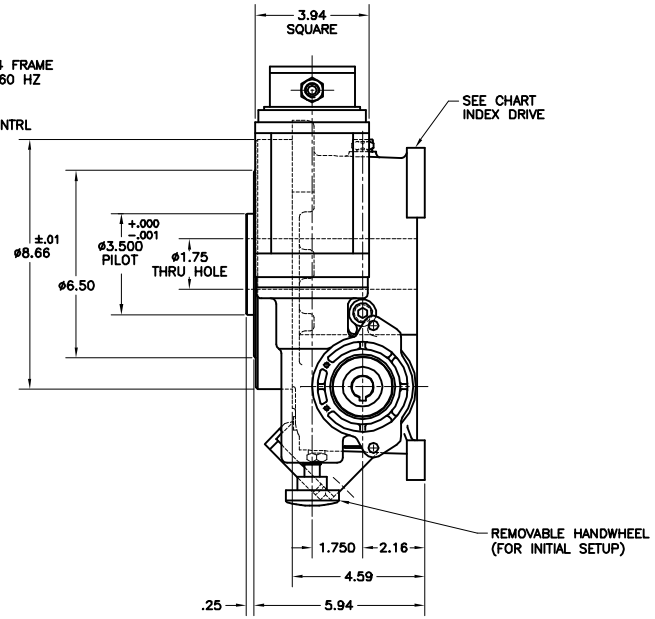

PART NUMBER	MOTION
601RDM-4XPRESS	4H24-330
601RDM-6XPRESS	6H24-270
601RDM-8XPRESS	8H24-270

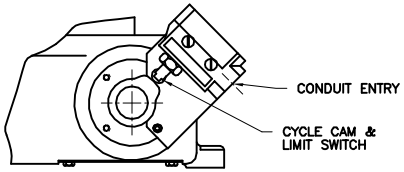

VIEW "A"-"A"

NOTES:

1. FOR ADDITIONAL DIMENSIONS ON 601RDM REFER TO CAMCO DWG. D-37879 & W/R180 MORSE RED DWG. # D-77862.
2. ASSEMBLE FOR OUTPUT SHAFT VERTICAL OVER INPUT.

DATE	DESCRIPTION OF CHANGE	REV. NO.

CERTIFIED SALES DRAWING

CAMCO. www.camcoindex.com
FERGUSON www.ferguson-co.com
1444 S. WOLF ROAD - WHEELING, ILLINOIS 60090

TITLE: ASSY 601RDM, W/R180 1/3 AC MTR & CTRL

DRAWN BY: CNS | CHECKED: | DATE: 09-09-08 | SCALE: 1=2

MATERIAL: | DWG. NO. D-90756

PROPRIETARY INFORMATION CONTAINED HEREIN IS CONFIDENTIAL AND IS NOT TO BE DISCLOSED OR DELIVERED TO THIRD PARTIES WITHOUT THE PRIOR WRITTEN CONSENT OF CAMCO AND/OR FERGUSON.

601RDM - XPRESS